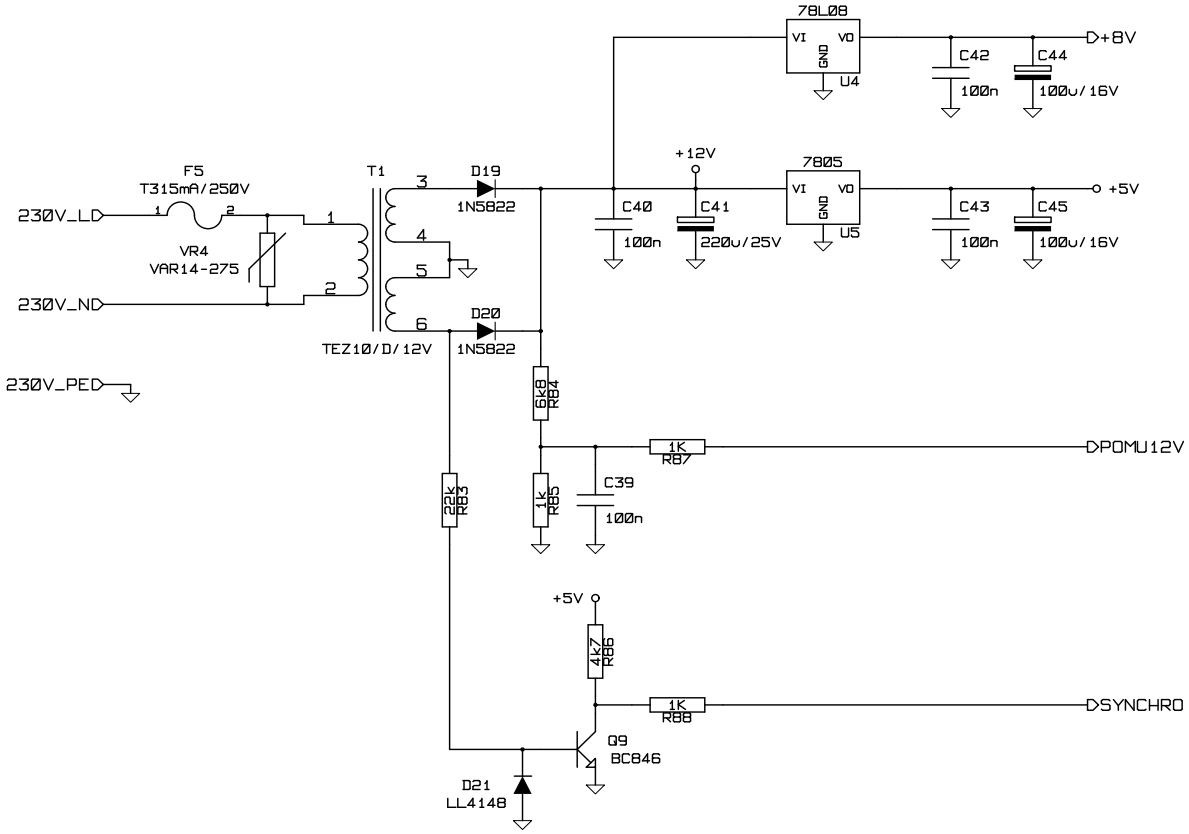

K&K		
Title: Dome Control Module - Zasilanie		
Size: A4	Date: 6 jun 2008	Rev: 0.91
KiCad E.D.A.		Sheet: 7/7